7UHQFK 026 %DUULHU 6FKRWWN\ 5H

TO-220AB
TSR10S150 &7S

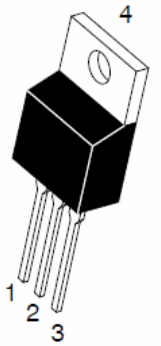

ITO-220AB
TSR10S150 &7)-S

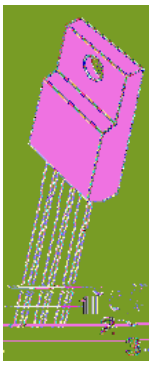

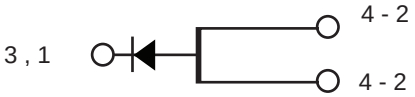

Features

‡ $GYDQWFHG WHFKQRORJ\
‡ /RZ RUZDUG GURS
‡ /RZ SRZHU ORVVHV
‡ +LJK HILFLHQF\ RSHUDWLRQ
‡ /HDG)UHH &RPSOLDQW

Applications

‡ '& '& &RQYHUWHUV
‡ $& '&$GDSWRUV
‡ 6ZLWFKLQJ SXSSOLHV
‡)UHHZKHHOLQJ GLRGHV

Maximum ratings and electrical characteristics (TJ = 25℃ unless otherwise noted)

3DUDPHWHU		6\PERO	/LPLW		8QLW
0D[LPXP SHDN UHSHWLWLYH UHYHUVH YROWDJH		9550			9
0D[LPXP DYHUDJH UHFWLIWLHG RXWSXW FXUUHQW &DVH WHPSHUDWXUH &&&&

RATINGS AND CHARACTERISTICS CURVES 7 $ f & XQOHVVQ RWKHUZLVH

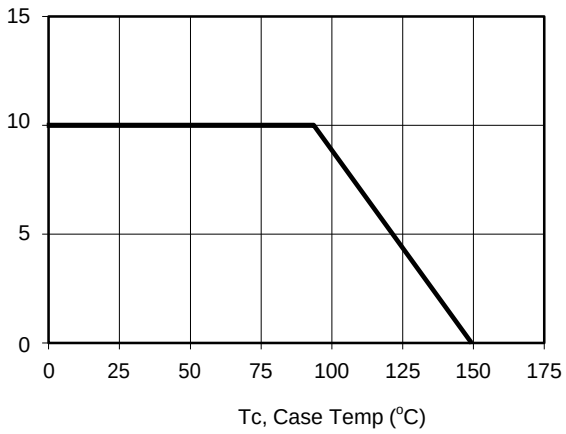

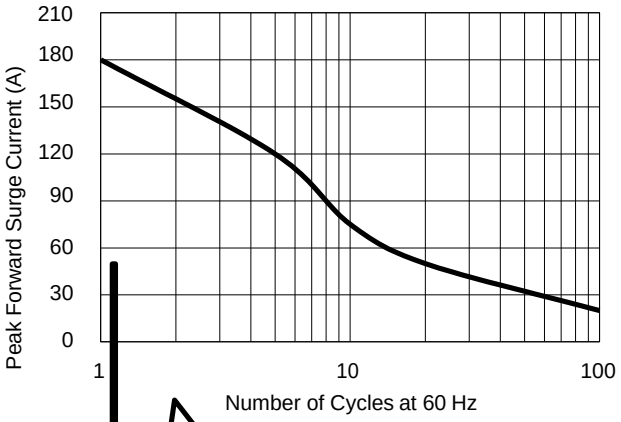

/ŒNJNJŠy˝ú 5ŠNJl·úλy∃ZI·åŠ

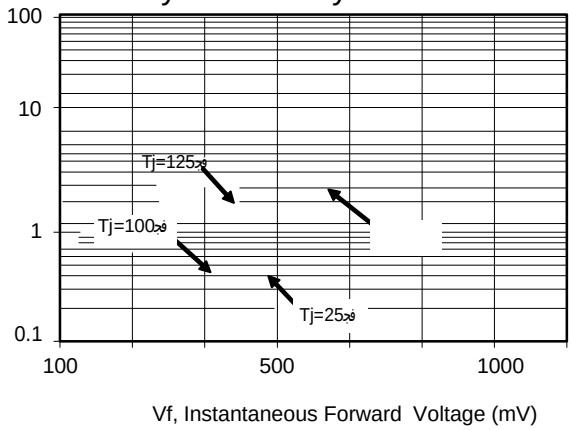

D Æ]u µu Z ‰^ ŠŒ]Ì µÀ Œ Œ v š

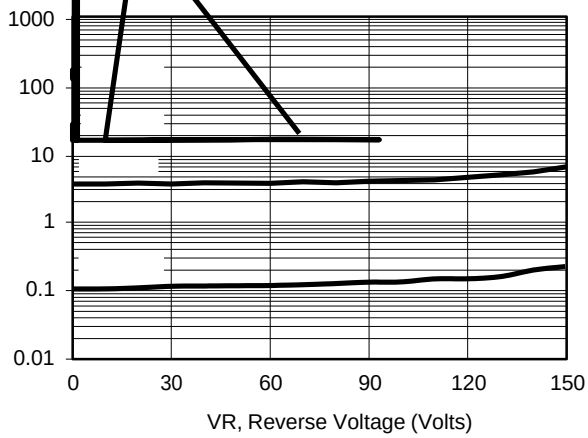

¢èLJλŏl· f C2NJøl·NJŘ ±2 f ú l·∃Š

¢èLJλŏl· f wŠØŠNJäŠ /ŒNJNJŠy˝ú

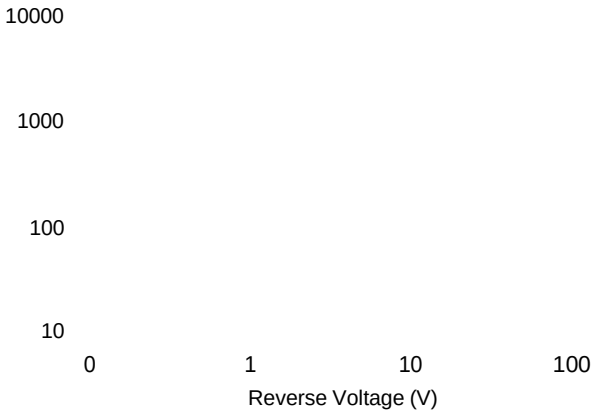

d Ç ‰] o : µ v š] } v ‰] š v

PACKAGE OUTLINE DIMENSIONS

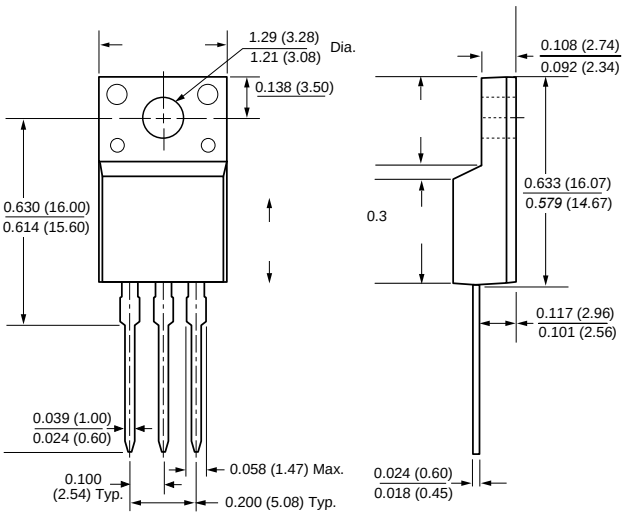

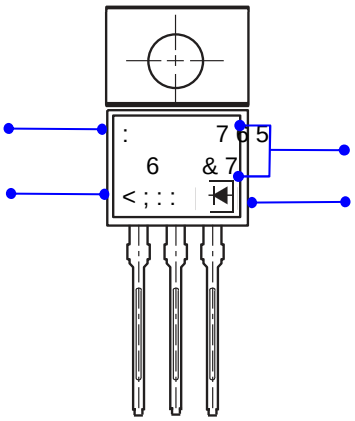

3UURGXFW 7RS6GH6O &7 RU 765 &67)
3'& LQIRUPDWLRQ

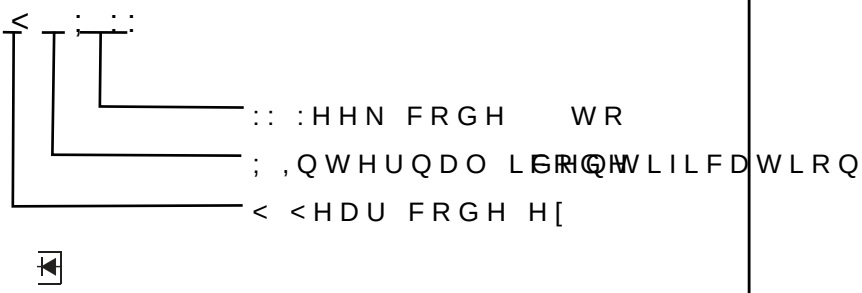

7XEH 'LPHQVLRQV

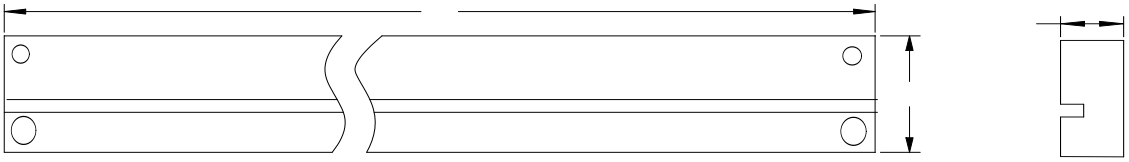

,QVLGH %R[2XWVLGH %R[

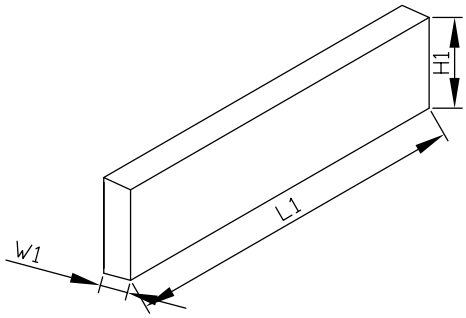

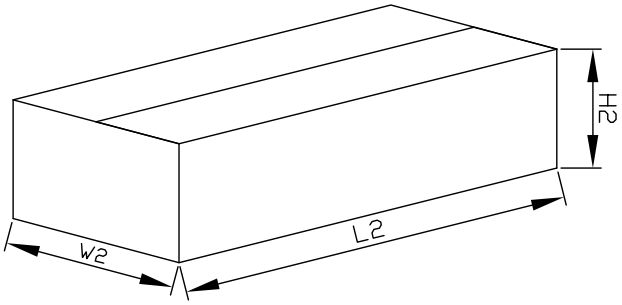

3DFNDJLQJ ,QIRUPDWLRQ

12	81,7	7XEH 'LPHQVLR			,QVLGH %R[			2XWVLGH %R[		
6L]H	PP	$	%	&	/	:	+	/	:	+
47<	3&6	3&6 7XEH			6PDOOHVW SDFNDJH 3&6 WXEH RQ WRWDO			3&6 FDUWRQ ER[RQ WRWDO		
1RWH	7RODHUDQFH RQ PP“ PP				PP“ PP			PP“ PP		